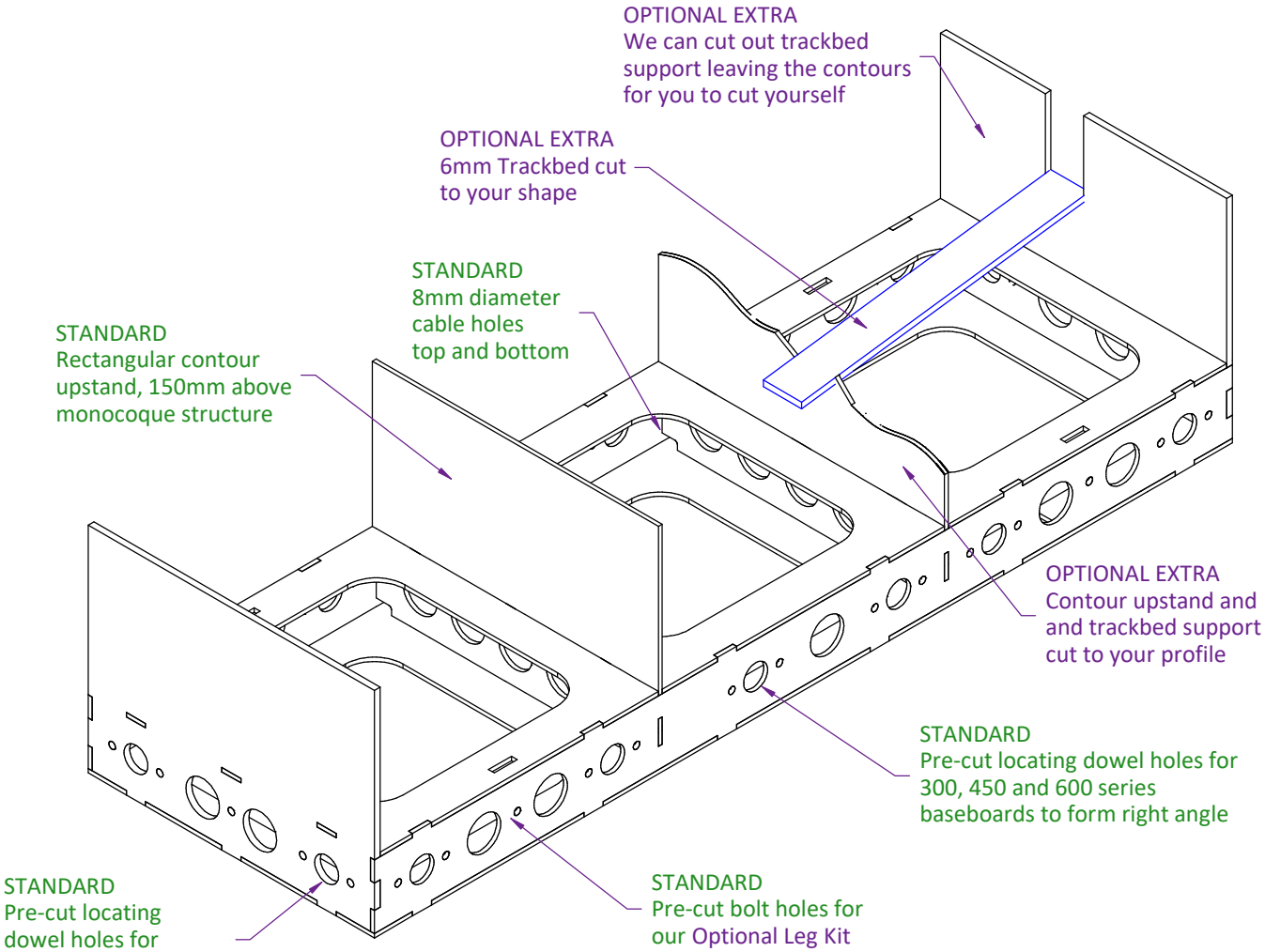

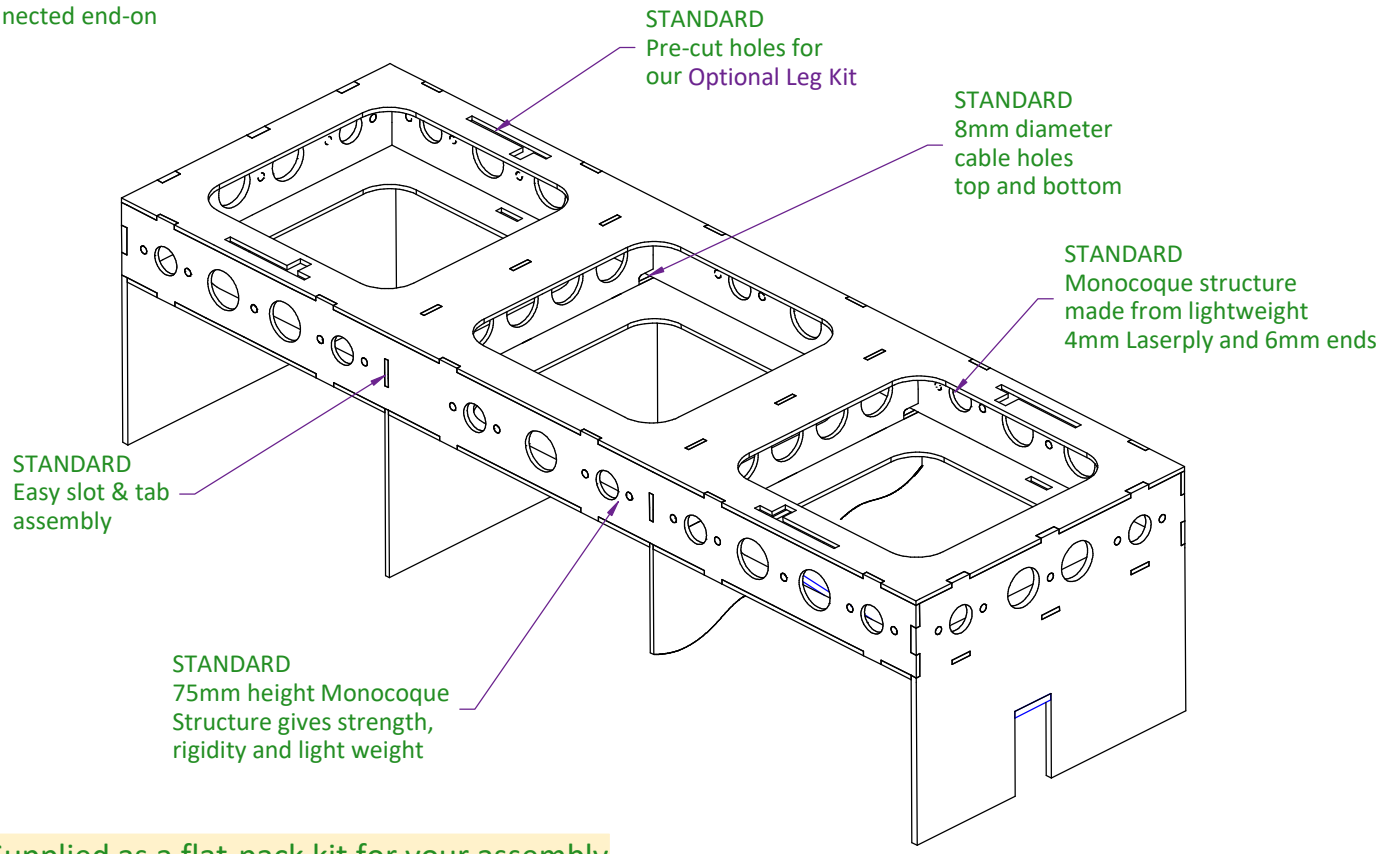

Supplied as a flat-pack kit for your assembly

MLS	Contour Range, C300 series: C300x900S Baseboard	Model Layout Services www.modellayoutservices.co.uk 07976 217624
	300mm x 900mm x 75mm (plus contours) laser cut baseboard kit	DRG C300x900S_v23-1 | Rev -